全国统一服务热线
400-826-7757

武精机器
WUJING MACHINE

WUJING MACHINE





地址：浙江省武义青年路 108 号
电话：0579-87647656　87647677
传真：0579-87647558　87641466
邮编：321200
网址：www.wjmachine.com
电子邮件：wj@wjmachine.com

Add：NO.108 Qingnian road,Wuyi county,Zhejiang province
Tel：0086-579-87647656　87647677
Fax：0086-579-87647558　87641466
P.C：321200
Http：//www.wjmachine.com
E-mail：wj@wjmachine.com

浙江武精机器制造有限公司
ZHEJIANG WUJING MACHINE MANUFACTURE CO.,LTD

企业简介
COMPANY PROFILE

武精机器
WU JING MACHINE

浙江武精机器制造有限公司创建于1993年，地处中国经济最活跃的长三角区“温泉名城”浙江省武义县城，高速、高铁可直达，地理位置优越，交通十分便利。公司占地14万平方米，下设三个厂、六个车间、九个职能部门，专业技术人员80余人，员工近600人，是一家集研发、生产、销售矿石破碎、筛分机械和耐磨铸钢件为一体的国家“专精特新”重点小巨人企业、国家高新技术企业、全国铸造行业排头兵企业、浙江省隐形冠军企业，并先后通过了ISO9001、ISO14001、ISO45001、ISO50001和GB/T29490管理体系认证。

三十多年来，公司获得了国家、省、市、县授予的各种荣誉100多项（次），同时主导制订国家标准2项、“浙江制造”团体标准1项，参与制修订国家标准31项、行业标准21项、团体标准2项。获得了国家授权专利80多项，发明专利“圆锥破碎机轧臼壁固定装置”获中国专利优秀奖。通过ISO 56005“创新与知识产权管理能力”（2级）评价，被评为“省知识产权示范企业”。

“武精”企业商号是浙江省知名商号，“武精牌”商标产品是浙江省名牌产品，产品销往国内各个省、市、自治区和国外40多个国家和地区。经过三十多年的品牌培育，“武精”品牌已得到国内外市场广泛认可，并与紫金矿业、西部黄金、江西铜业、日本小松、日本川崎、特雷克斯等国内外知名公司建立了良好的战略伙伴关系。

公司拥有有机脂水玻璃自硬砂和二氧化碳水玻璃砂3条生产线，采用全封闭半自动送砂、配料和型砂混制系统；中频熔炼炉可浇铸最大单重22吨的铸件。铸件热处理采用14台全电脑控制系统的厢式、托盘式天然气热处理炉，出炉方式采用自动控制叉车出炉，保障每一炉铸件下水的工艺稳定性。拥有龙门加工中心、卧式加工中心、龙门刨床、龙门铣床、立式车床、卧式车床、落地镗床、焊接机器人等特大型设备250余台（套）；有单梁行车、双梁行车和落地式行车110余台。配置了Creaform手持式3D扫描仪、直读光谱仪、金相显微镜、万能试验机、超声波探伤仪、冲击试验机、布洛维光学硬度计、大疆测绘无人机、大地测量仪、激光测距机等先进可靠的检测设备，为产品的质量稳定提供了可靠的保证。

公司年产高锰钢、超高锰钢、中低碳合金钢、高铬铸铁、中铬铸铁等耐磨铸钢件近4万吨。自2010年起在中国国际铸件博览会上多次被评为“优质铸件金奖”。年产各种型号规格的破碎机、制砂机、振动筛、洗选机等矿山机械200余台（套），配置的生产线最大产能达到时产4000吨。

依托公司先进的生产和检测设备，以及专业的技术团队，能够为顾客提供各类大中型矿山机械设备零配件配套服务，产品涵盖机架、动锥、主轴、调整套、调整环、动颚、齿轮及部件总成等。

公司把人才队伍建设列为各项工作之首，每年投入几十万元人才培养基金，采取“请进来、送出去”的方式对员工进行各类培训，邀请国际的知名专家、学者为公司管理和技术人员授课。公司是技能人才评价省级引领企业，每年分工种在一线员工中开展技能等级认定，提升员工技能。目前，公司已形成一支阶梯式管理团队和技术骨干队伍，为公司的企业管理、技术进步、科技创新和持续发展提供了人力资源保障。

Zhejiang Wujing Machine Manufacture Co., Ltd., a leading manufacturer specialized in crusher manganese wear parts, was founded in 1993 in Wuyi County, Zhejiang province.. The company has an area of 150,000 square meters, nearly 700 employees, including 85 professional technicians. Wujing is one of the Top 100 Enterprises of China Casting Industry. It is a certified manufacturer, including ISO9001 International Quality Management System, ISO14001 Environmental Management System, OHSAS18001 Occupation Health Safety Management System, and GB/T23331 Energy Management System.

In the past 30 years, the company has won more than 100 honors awarded by local and national government authorities. Wujing Trade Mark “ ” was awarded as “Famous Brand of Zhejiang Province”, and relevant products were awarded as “Famous Product of Zhejiang Province”.
Our products have been delivered to more than 30 overseas countries across 5 continents, and more than 20 provinces within China.

Three foundry production lines enable us to delivering around 40,000 tons of wear resistance steel castings, as high manganese steel, alloy steel, and high chrome iron, every year around the world, with max. single-piece weight up to 22 tons. The advanced designed production process, including intelligent weighting system of furnace, fully computerized control system of heat treatment, fast-quenching cooling system, etc, which are the fundamental for the quality guarantee of our products. Plus, the 13000 m2 engineering workshop, fully equipped with over 250 sets processing machines & equipment of varied capacities, and the international standardized testing lab, ensuring our capacity of new product engineering and development.

Having our own pattern workshop enable the end-end quality control for the final products. Stocking over 30,000 wear parts for most major crusher makes, we are capable of fulfill customer demands of standard wear parts or tailor-made ones, along with superior wear life, strength, fatigue resistance, which are critical in most highly productive and demanding mineral processing operations.

Our products mainly cover wear parts of jaw crusher, cone crusher, impact crusher, deep cavity-type reversible hammer crusher, vertical crusher, strong alloy crusher, as well as full engineering capacity to meet customer demands of complete crushing & screening plant, including varies types of crushers, sand washing machine, feeding machine, vibrating screen, belt conveyor.

汗水成就梦想，荣誉见证辉煌

SWEAT ACHIEVE DREAMS
HONORS WITNESS SUCCESS

荣誉，见证了价值实现的每一步印记。
Honors witnessed every step of value realization.



武精机器
WU JING MACHINE

企业资质
ENTERPRISE QUALIFICATION







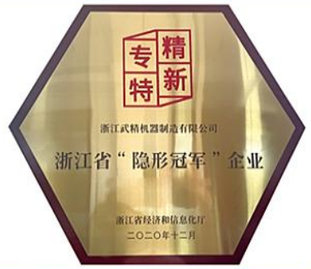











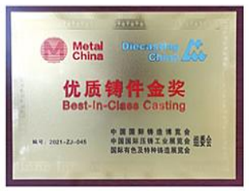

















公司鸟瞰图 Airscape



铸造厂 Foundry



热处理车间现场 Heat treatment shop



机加工车间现场 Machining Shop

关键机加工设备

MAIN MACHINING EQUIPMENT



DVT400×25/32NC立式车床
DVT400 × 25/32NC vertical lathe



CAK6180×3000数控车床
CAK6180 × 3000 CNC lathe



CK5225B×16/12G-NC立式车床
CK5225B × 16/12G-NC vertical lathe



CQK5250B/2SP-H立式车床
CQK5250B/2SP-H vertical lathe



GLU13×21PLUS 加工中心
GLU13 × 21PLUS machining center



GLU32×40PLUS加工中心
GLU32 × 40PLUS machining center

主要检测设备

MAIN INSPECTION EQUIPMENT

武精机器
WU JING MACHINE



XD30M金相显微镜
XD30M metallographic microscope



DWC-60 冲击试样低温槽
DWC-60 Impact Test Sample Low Temperature Tank



CHT4305液压式万能试验机
CHT4305 Hydraulic Universal Testing Machine



CST-50夏比投影仪
CST-50 Charpy Projector



200HPD-150电动洛氏硬度计
200HPD-150 electric Rockwell hardness tester



JBW-300B微机控制冲击试验机
JBW-300B microcomputer controlled impact testing machine



MAXx LMF14直读光谱仪
MAXx LMF14 Direct Reading Spectrometer

PXL

PXL 系列强力旋回破碎机
PXL SERIES POWERFUL GYRATORY CRUSHER

武精机器 WU JING MACHINE

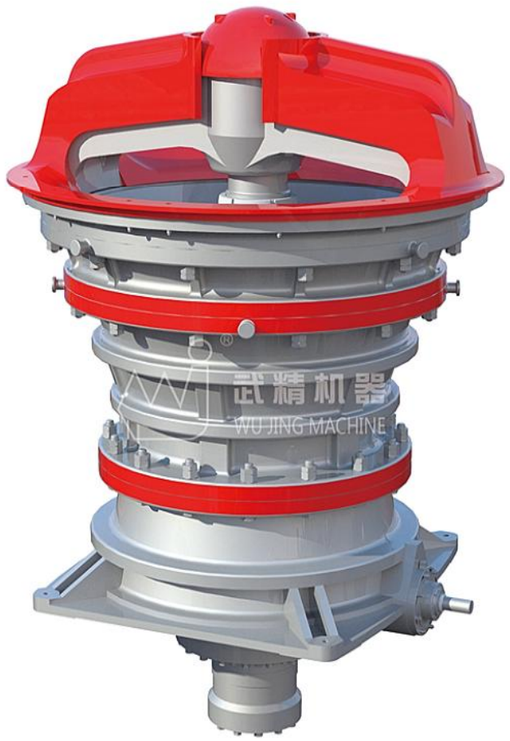

本公司生产的PXL系列强力旋回破碎机主要技术指标符合国内最新的行业标准JB/T 11294-2012，与JB/T 3874-2010版的旋回破碎机行业标准相比，在相同进料口尺寸下本产品的产量更高(约为原来的1.5倍)，能耗低，性能指标与国外进口的同类产品相当。

The main technical parameters of the PXL series powerful gyratory crusher manufactured by our company conform to the China's latest industry standard JB/T 11294-2012. Compared with requirements of previous gyratory crusher industry standard (JB/T 3874-2010), this product features higher productivity (approximately 1.5 times of the original value) under same feed port size, with the performance parameters equivalent with those of imported like products.

性能特点：
PERFORMANCE FEATURES:

1.拥有更大倾角的破碎腔和较长的破碎面，实现了连续式破碎,比传统的旋回圆破碎机产量大，效率高、能耗低；
2.独特的破碎腔设计，排料流畅，破碎能力大，衬板磨损少，使用成本低廉；
3.采用弧锥齿轮传动，承载能力高，运行平稳，噪音小；
4.液压调节排料口尺寸，减轻了劳动强度；
5.具有过铁保护功能，破碎腔在进入超硬物体时主轴可快降慢升，排出超硬物体，降低冲击，运行安全稳定；
6.有效的防尘密封：配有一个正压鼓风机，防止粉尘进入偏心和驱动装置；
7.高强度，平稳式机架设计，可采用运输工具直接投料，更适应于恶劣环境下正常运行；

1.It has a crushing chamber of higher inclination angle and a longer crushing face to realize continuous crushing, featuring higher productivity and higher efficiency compared with common gyratory crushers.
2.The unique crushing chamber design features smooth material discharge, higher crushing capacity, low wear of liner, and low operation cost.
3.The spiral bevel gear drive is adopted, featuring high carrying capacity, stable operations, and lower noise.
4.The hydraulically adjusted size of discharge port relieves the labor strength.
5.The super-hard object protection function is provided. In event of ingress of super-hard object into the crushing chamber, the main shaft can lower rapidly and lift slowly to discharge the super-hard object, in order to lower the impact and ensure safe and stable operations.
6.The effective dust-proof air-tightness is provided: One positive pressure fan is fitted to guard the eccentric and drive devices against ingress of dust.
7.The high strength and stable frame design can enable the direct feed by transport tool，which makes normal operating adapt better to the severe environment.

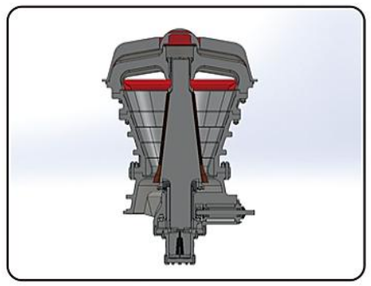
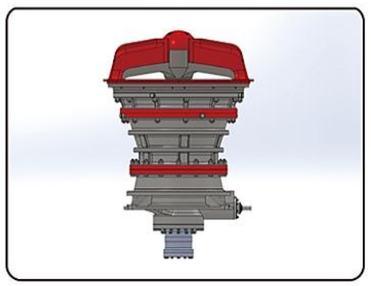
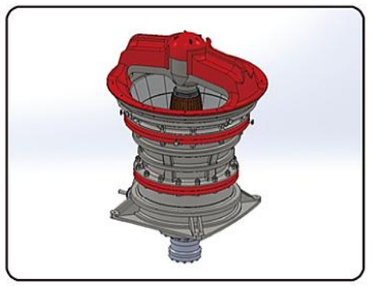

产品优势：
PRODUCT ADVANTAGES:

本产品与大型颚式破碎机都可用作粗碎的破碎设备，二者比较，本产品的优点如下:
1.本产品的破碎腔比颚式破碎机深，破碎比更大。
2.原始物料可以直接从运输工具倒入进料口，无需设置喂料机构。
3.本产品的破碎过程是沿着圆环形的破碎腔连续运行的，因此生产能力大(是同入料粒径颚式破碎机的2倍以上)，单位产能电耗低，工作平稳，破碎产品的粒度更均匀。

Both this product and the large-sized jaw crusher can be used as the coarse crushing equipment. Compared with each other, the advantages of this product are as below:
1.The crushing chamber of this product is deeper than that of jaw crusher to realize higher crushing ratio.
2.The original material can be loaded into the feed port directly from transport tool so that it's unnecessary to set up feed mechanism.
3.The crushing process of this product is continuously running along the circular crushing chamber, featuring high productivity (more than 2 times of that of jaw crusher with same size of feed particles), low power consumption per unit capacity, stable operations, and more uniform particle size of crushed products.

技术参数表
TECHNICAL SPECIFICATION

规格型号 Specification and model	最大进料粒度 Maximum feed size (mm)	排料口调整范围 Adjustment range of discharge port (mm)	处理能力 Productivity (t/h)	电动机功率 Motor power (kW)	重量（不含电动机） Weight (exclusive of motor) (t)	外形尺寸(长×宽×高) Overall dimensions (L×W×H) (mm)
PXL-120/165	1000	140～200	1700～2500	315～355	155	4610×4610×6950
PXL-137/191	1180	150～230	2250～3100	450～500	256	4950×4950×8100
PXL-150/226	1300	160～240	3600～5100	600～800	400	6330×6330×9570

注：表中的处理能力数据仅基于破碎物料松散密度为 1.6t/m³ 时开路作业生产。实际生产能力与原料的物理性质、给料方式、给料尺寸等相关因素有关。有关更多详情，请致电武精矿机。

Note: the processing capacity data in the table is only based on the loose density of crushed materials, which is 1.6t/m³ Open circuit operation during production. The actual production capacity is related to the physical properties of raw materials, feeding mode, feeding size and other related factors. For more details, please call WuJing machine.



PE\WJ\WJH

复摆颚式破碎机
COMPOUND PENDULUM JAW CRUSHER

武精机器 WU JING MACHINE

复摆颚式破碎机是石料破碎中最常见的破碎设备之一，由于结构简单、操作方便、维护容易、坚固耐用等优点，早已成为我国生产最多、使用最广的破碎设备。复摆颚式破碎机可破碎抗压强度不超过250MPa的各种矿石，广泛应用于矿山、冶金、建材、公路、铁路、水利、化工等行业的粗碎、中碎和细碎作业。

The PE\WJ\WJH series jaw crusher is one of the commonly applied crushing equipment for crushing rocks. They are popular used jaw crusher in the world for the reasons of simple structure，convenient operation，convenient maintenances and durable. The PE series jaw crusher is capable of crushing all kinds of ores with compressive strength no more than 250MPa, and widely used for coarse，intermediate，and fine crushing operations in mining，metallurgy，construction，roads，railways，water conservancy，and chemical industries.



性能特点：
PERFORMANCE FEATURES:

1.结构简单，使用方便，故障率低。
2.部件更换方便，维护保养工作量小。
3.用垫片调整排料口，排料口调整范围大。

1.Simple structure，user-friendly，low failure rate.
2.Easy to change the spare parts，low maintenance workload.
3.Large range of shim-adjustment close side setting.

❶ 飞轮/皮带轮
❷ 固定齿板压块
❸ 动颚压块
❹ 活动齿板
❺ 固定齿板
❻ 机架组
❼ 轴承
❽ 偏心轴
❾ 动颚组
❿ 调整座
⓫ 起顶螺杆
⓬ 肘板
⓭ 拉杆弹簧
⓮ 拉杆

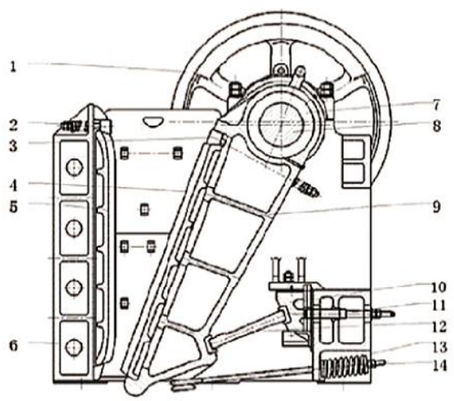


Grids partition of mobile jaw

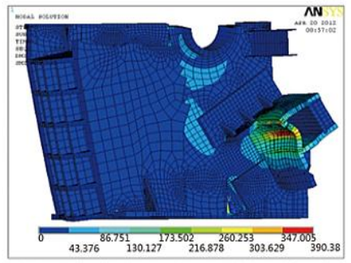

Whole stress distribution nephogram of the original frame

原机架的整体应力分布云图

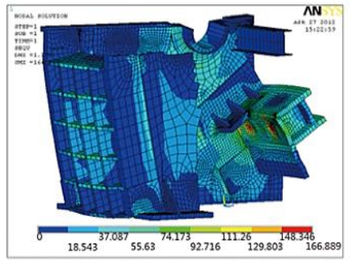

Whole stress distribution nephogram of the improved frame

改进后的机架整体应力分布云图

技术参数表
TECHNICAL SPECIFICATION

规格型号 Specification and model	进料口 Feed port (mm)	最大进料粒度 Maximum feed size (mm)	排料口调整范围 Adjustmentrange of discharge port (mm)	处理能力 Productivity (t/h)	主轴转速 Main shaft speed (r/min)	电动机功率 Motor power (kW)	重量（不含电动机） Weight (exclusive of motor) (t)
PE600X900	600X900	500	65～160	80~140	250	75	14.8
PE750X1060	750X1060	630	80～180	160～220	225	110	25
PE900X1200	900X1200	750	110～210	240～450	229	160	40
WJ1108	800X1060	700	80～160	100～240	250	110	25.5
WJ1210	1000X1200	850	150～235	250～520	220	200	42
WJ1311	1100X1300	1050	180～330	300～700	220	220	58
WJH165	1250X1650	1050	150～300	540～1000	206	280	75

注：表中的处理能力数据仅基于破碎物料松散密度为 1.6t/m³ 时开路作业生产。实际生产能力与原料的物理性质、给料方式、给料尺寸等相关因素有关，有关更多详情，请致电武精矿机。

Note: the processing capacity data in the table is only based on the loose density of crushed materials, which is 1.6t/m³ Open circuit operation during production. The actual production capacity is related to the physical properties of raw materials, feeding mode, feeding size and other related factors. For more details, please call WuJing machine.

WJG

欧版颚式破碎机
WJG SERIES JAW CRUSHER

武精机器 WU JING MACHINE

WJG系列颚式破碎机是吸收国际先进技术，结合中国金属材料性能设计的一款高性能颚式破碎机，具有结构强度更高、设备可靠性更高、破碎产能更高等特点，主要用于金属矿山、建筑砂石等物料加工中的一级破碎环节。

WJG series jaw crusher is a high-performance jaw crusher, which has the characteristics of higher structural strength, higher equipment reliability, and higher crushing capacity. It is mainly used for the primary crushing for mining and quarrying industry.

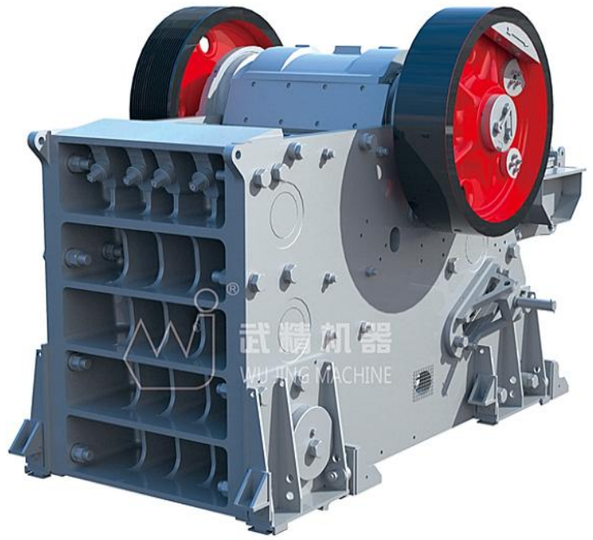

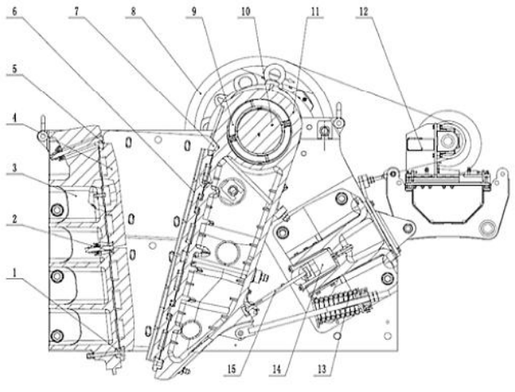

1.下楔块 Fastening Item
2.中间楔块 Tightening Wedge
3.机架 Frame
4.固定板 Fixed Jaw
5.固定板上楔块 Swing Jaw Wedge
6.活动板 Swing Jaw
7.活动板上楔块 Swing Jaw Wedge
8.飞槽轮 Fly Wheel
9.轴承 Bearing
10.主轴 Main Shaft
11.动颚 Pitman
12.传动部 Transmission
13.弹簧 Spring
14.调整楔块 Flat Plate
15.肘板 Toggle Plate

性能特点：
PERFORMANCE FEATURES:

1. 模块化设计，无焊接框架结构，耐冲击性能高；
2. 一体化电机安装，节约安装空间；
3. 优越的破碎腔型设计，优化啮角及运动特性，提高了破碎比；
4. 快速调整排料口，采用液压楔块调整方式，操作更加简单、安全；
5. 配置集中润滑系统，节约维护成本，机器运行时间更长；
6. 使用高性能锻造合金钢主轴，高质量重载轴承，使用更可靠；
7. 易于维护安装，运行成本低。

1. Modular design, no welding frame structure, high impact resistance;
2. Integrated motor installation, saving installation space;
3. Superior crushing cavity design, optimized engagement angle and movement characteristics, help to improve the crushing ratio;
4. Convenient adjustment of the discharge opening and the adoption of the hydraulic wedge adjustment method make the operation simpler and safer;
5. Having a centralized lubrication system that help to save maintenance costs and maximize the operating time;
6. The use of high-performance forged alloy steel main shaft, high-quality heavy-duty bearings, more reliable use;
7. Easy to maintain and install, low operating cost.

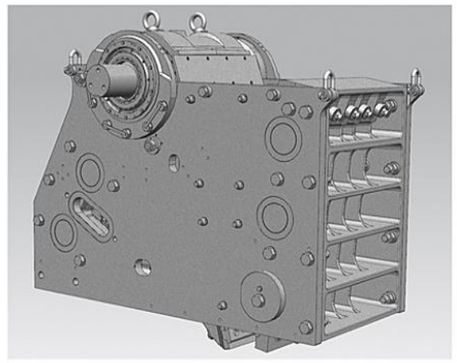

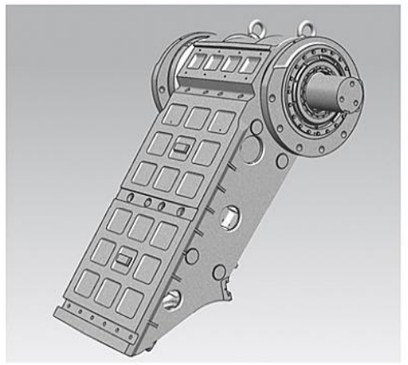

颚式破碎机曲线图 Indicative product gradation

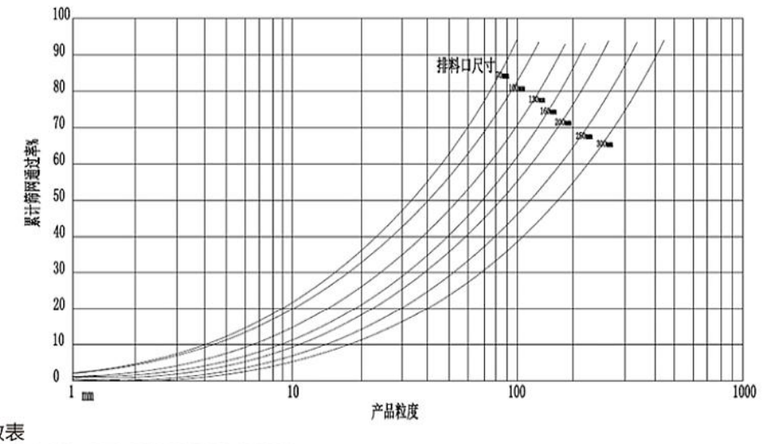

技术参数表
TECHNICAL SPECIFICATION

规格型号 Specification and model	进料口 Feed size (mm)	电动机功率 Motor power (kW)	排料间隙 (mm) 处理能力 (t/h)											主轴转速 (r/min)
			60	70	80	100	125	150	175	200	225	250	300	
WJG96	930X580	90	105~135	125~155	140~180	175~225	220~280	265~335	310~390					330
WJG110	1100X850	160		190~250	210~275	225~330	310~405	370~480	425~550	480~625				230
WJG125	1250X950	185				290~380	350~455	415~535	470~610	530~690	590~770	650~845		220
WJG140	1400X1070	220					385~500	455~590	520~675	590~765	655~850	725~945		220
WJG160	1600X1200	250						520~675	595~775	675~880	750~975	825~1070	980~1275	200

注：表中的处理能力数据仅基于破碎物料松散密度为 1.6t/m³ 时开路作业生产。实际生产能力与原料的物理性质、给料方式、给料尺寸等相关因素有关。有关更多详情，请致电武精矿机。

Note: the processing capacity data in the table is only based on the loose density of crushed materials, which is 1.6t/m³ Open circuit operation during production. The actual production capacity is related to the physical properties of raw materials, feeding mode, feeding size and other related factors. For more details, please call WuJing machine.

WJ

WJ定轴多缸液压圆锥破碎机
WJ HYDRAULIC CONE CRUSHER

武精机器 WU JING MACHINE



WJ定轴多缸液压圆锥破碎机是吸收国际先进技术，结合中国金属材料性能设计的一款定轴多缸高性能破碎机，主要用于金属矿山、建筑砂石等物料加工中的二段破碎和三段破碎环节，因其破碎能力强、产量大，更多的被用于中硬物料的破碎。

WJ hydraulic cone crusher is a high-performance crusher designed by integrating advanced crusher technology and combining with the performance of metallic material character. It is mainly used for the secondary or tertiary stage crushing in mining, aggregating and other materials. By the strong crushing ability and large output, it is widely used for the crushing of medium and hard materials.

性能特点：
PERFORMANCE FEATURES:

1、采用主轴固定，偏心套绕主轴旋转的结构，可承受更大的破碎功率。合理的偏心距、腔型和运动参数配合，大大提高了生产能力和工作效率。

2、破碎腔采用高效层压破碎原理，破碎发生在物料和物料之间，破碎效率高，粒型优异，易损件磨耗低。

3、轧臼壁和破碎壁装配面是经过特殊设计，安装方便，更快捷。

4、全液压的调整和保护装置，调节排料口大小、清腔方便快捷。

5、配置触摸屏操作界面，采用可视化传感器数值，实时显示工作状态。使破碎系统具有更稳定、更智能的运行能力。

1、The main shaft is fixed and the eccentric sleeve rotates around the main shaft, which can withstand greater crushing power. Superior coordination, between eccentricity, cavity type and motion parameter, greatly improve production capacity and work efficiency.

2、The crushing cavity adopts the principle of high-efficiency lamination crushing, which helps the material to be crushed between themselves. It will then improve the crushing efficiency and the material output shape, also reduce the wear parts consumption.

3、The assembly surface of the mantle and concave is specially designed, which make it easy to install.

4、The Equipment of the full hydraulic adjustment and protection device make it easy to change the size of the discharge port, and faster and more convenient in cleaning cavity.

5、It is equipped with a touch screen operation interface and uses visual sensor values to display the working status in real time, which makes the operation capability of the crushing system more stable and intelligent.

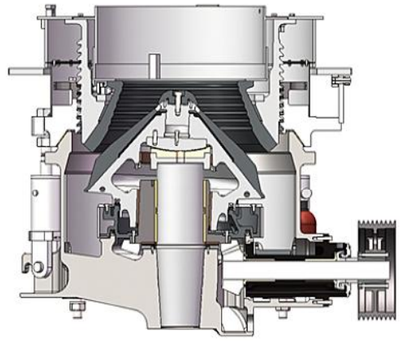

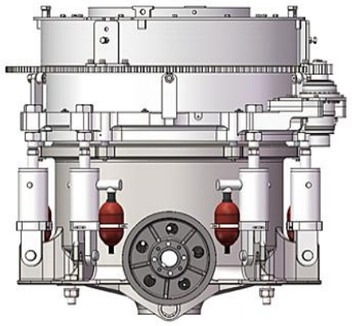

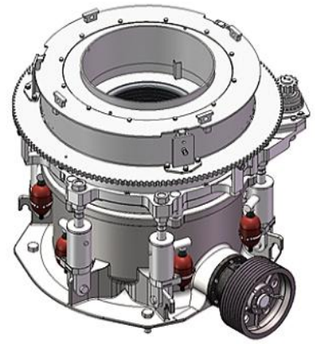

技术参数表
TECHNICAL SPECIFICATION

规格型号 Specification and model	腔形 Cavity	紧边进料口尺寸 Feed size（mm）	最小排料口尺寸 Minimum output size（mm）	处理能力 Capacity（t/h）	电动机功率 Motor power（kW）	重量（不含电动机） Weight（exclusive of motor）（t）
WJ300	细碎 (F)	105	13	140~180	220	18.5
	中碎 (M)	150	16	180~230		
	粗碎 (C)	210	20	190~240		
	超粗 (EC)	230	25	220~440		
WJ500	细碎 (F)	130	16	260~320	400	37.5
	中碎 (M)	200	20	310~410		
	粗碎 (C)	285	30	400~530		
	超粗 (EC)	335	38	420~780		
WJ800	细碎 (F)	220	20	420~530	630	64.5
	中碎 (M)	265	25	480~710		
	粗碎 (C)	300	32	530~780		
	超粗 (EC)	353	38	600~1050		
WJMP800	细碎 (F)	240	20	570~680	630	121
	中碎 (M)	300	25	730~970		
	粗碎 (C)	340	32	1000~1900		
WJMP1000	细碎 (F)	242	25	915~1210	750	153
	中碎 (M)	343	32	965~1280		
	粗碎 (C)	360	38	1375~2420		
WJMP1250	细碎 (F)	242	25	1145~1510	950	154
	中碎 (M)	343	32	1455~1875		
	粗碎 (C)	360	38	1720~3025		

注：表中的处理能力数据仅基于破碎物料松散密度为 1.6t/m³ 时开路作业生产。实际生产能力与原料的物理性质、给料方式、给料尺寸等相关因素有关。有关更多详情，请致电武精矿机。

Note: the processing capacity data in the table is only based on the loose density of crushed materials, which is 1.6t/m³ Open circuit operation during production. The actual production capacity is related to the physical properties of raw materials, feeding mode, feeding size and other related factors. For more details, please call WuJing machine.

PYYQ

PYYQ 系列强力圆锥破碎机
PYYQ SERIES POWERFUL CONE CRUSHER

武精机器 WU JING MACHINE

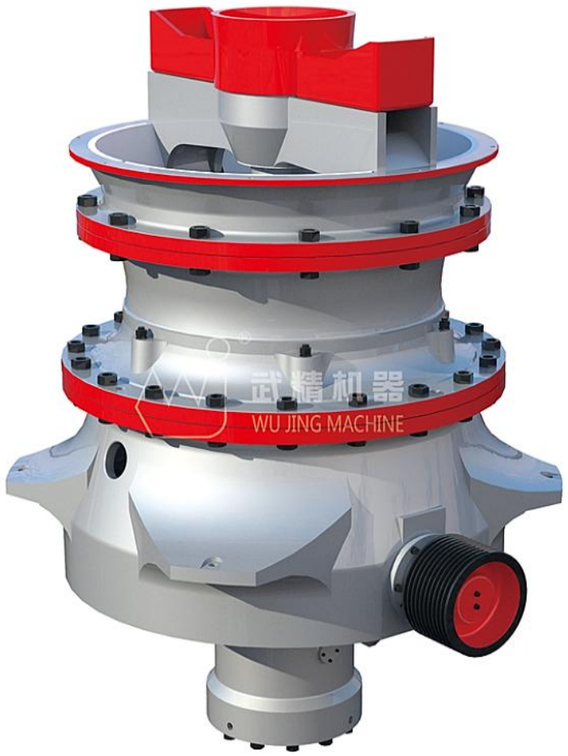

PYYQ系列强力圆锥破碎机为本公司自主研发的高效、低能耗、节能环保型破碎机，采用触摸屏进行监控、操作，可随时进行最佳粒度的调整控制，自动化程度高、操作维护简单方便，具有破碎比大、通过量大、成品产量高、产品粒形好、粉尘排放少等优点，深受用户青睐。

本产品研制过程中获得了**浙江省重大科技专项重点工业项目立项，并顺利通过了浙江省科技厅组织的项目验收。**经国家科技部浙江省科技信息研究院科技查新及国家矿山机械质量监督检验中心、浙江省机电产品质量检测所鉴定，本产品的主要技术指标达到国内领先水平。本公司参与制订“强力圆锥破碎机”行业标准(标准编号：JB/T 11295-2012)，获国家授权发明专利2项、实用新型专利5项、外观专利1项。

本产品在以下几个方面取得了关键技术的突破和创新：一是改变和优化了传统设计，降低了破碎机的高度，缩小了体积，降低了生产成本，提高运行的稳定性；二是成功设计了类“C”型结构破碎腔，提高了破碎机的生产效率和碎石粒度的均匀度,石料不易堵塞，衬板磨损均匀，延长了使用寿命；三是经分析、比较、试验，采用新材料、新工艺,提高了重要零部件(偏心套、铜套、止推轴承、动锥、衬板、齿轮等)的耐磨性；四是研制了先进的液压调整、润滑系统及电器自动化控制系统，实现了破碎机生产过程中的实时调节、运行数据显示、数据存储、统计报表及异常情况报警的自动化，大大降低了操作人员的劳动强度。

本产品经新疆、山东、江苏、浙江等地的多家用户实际使用反馈，与市场现有同类产品相比，具有功率大、产量高、能耗低、效率高、重量轻、噪音低、粉尘排放少、自动化控制程度高等诸多优点，且售价低廉，是替代进口同类型破碎机的理想产品。

PYYQ series powerful cone crusher is one high efficiency, low energy consumption, energy-saving, and environmentally-friendly crusher independently developed by our company. It’s monitored and operated by touchscreen to adjust and control the best particle size at any time. Featuring the advantages of high automation level, simple and convenient operations and maintenances, high crushing ratio, high throughput capacity, high finished product productivity, good product particle form, and low dust emission, it’s highly favored by users.

This product was approved as key industrial project of Zhejiang Major Scientific and Technologic Project during the development and successfully passed the project acceptance organized by Zhejiang Science and Technology Department. Verified by scientific and technologic novelty retrieval of the Provincial Scientific and Technologic Information Research Institute of the Ministry of Science and Technology and authenticated by the National Quality Supervision and Inspection Center of Mining Machinery and the Provincial Mechanical and Electrical Products Quality Inspection Institute, the main technical parameters of this product reach the domestic leading level. This product participated in the establishment for 1 item of industry standard “Powerful Cone Crusher” (Standard number: JB/T 11295-2012) and won 2 national authorized invention patents, 5 utility model patents, and 1 appearance patent.

This product realized breakthroughs and innovations in following critical technologies: 1) The traditional design was modified and optimized to reduce the height of crusher, reduce the volume, save the production cost, and improve the operation stability; 2) The C-shaped crushing chamber was successfully designed to improve the productivity of crusher and uniformity of crushed particles, prevent the blockage by rocks, ensure uniform wear of liners, and prolong the service life; 3) Through analysis, comparison, and testing, new materials and processes were adopted to improve the wear resistance of main parts (eccentric bushing, copper bushing, thrust bearings, movable cone, liners, and gears); 4) The advanced hydraulic adjustment and lubrication system and electrically automated control system were developed to realize the automated real-time adjustment, operation data display, data storage, statistical report, and abnormality alarm and greatly relieve the labor strength of operation personnel.

According to the actual operation feedbacks from the various users in Xinjiang, Shandong, Jiangsu, and Zhejiang, compared with like products available in the market, this product features the advantages of high power, high productivity, low energy consumption, high efficiency, light weight, low noise, low dust emission, high automated control level, and competitive price and is an ideal product for substitution of imported like crushers.

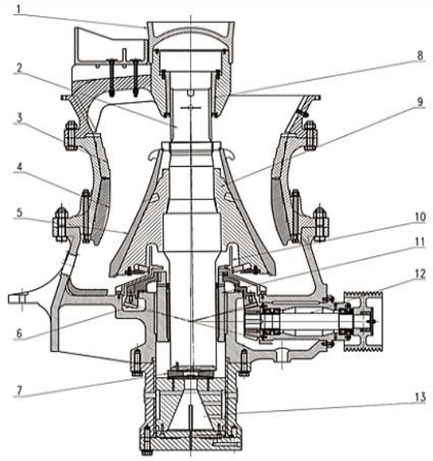

1.顶部轴承盖
2. 主轴
3. 上轧臼壁
4. 下轧臼壁
5. 破碎壁
6. 传动齿轮
7. 止推轴承
8. 顶部轴承
9. 动锥体
10. 机架防尘环
11. 偏心套
12. 传动轴总成
13. 液压缸总成

技术参数表
TECHNICAL SPECIFICATION

规格型号 Specification and model	腔型 Cavity	紧边进料口尺寸 Feed size (mm)	最小排料口尺寸 Minimum output size (mm)	处理能力 Capacity (t/h)	电动机功率 Motor power (kw)
PYYQ1200	超粗（EC）	215	16	115~395	250
	粗碎（C）	175	13	100~360	
	中粗（MC）	140	13	120~345	
	中碎（M）	110	13	120~335	
	中细（MF）	85	10	115~300	
	细碎（F）	70	8	100~250	
PYYQ1400	超粗（EC）	275	19	170~600	315
	粗碎（C）	215	19	180~640	
	中粗（MC）	175	16	185~550	
	中碎（M）	135	16	190~500	
	中细（MF）	115	13	190~450	
	细碎（F）	85	13	195~400	
PYYQ1200S	超粗（EC）	450	35	260~600	250
	粗碎（C）	400	29	220~510	
	中粗（MC）	300	25	190~485	
PYYQ1400S	超粗（EC）	560	41	340~1050	315
	粗碎（C）	500	38	310~890	

注：表中的处理能力数据仅基于破碎物料松散密度为 1.6t/m³ 时开路作业生产。实际生产能力与原料的物理性质、给料方式、给料尺寸等相关因素有关。有关更多详情 ,请致电武精矿机。

Note: the processing capacity data in the table is only based on the loose density of crushed materials, which is 1.6t/m³ Open circuit operation during production. The actual production capacity is related to the physical properties of raw materials, feeding mode, feeding size and other related factors. For more details, please call WuJing machine.

PYS/F

PYS/F 系列复合圆锥破碎机
PYS/F SERIES COMPOUND CONE CRUSHER

武精机器 WU JING MACHINE

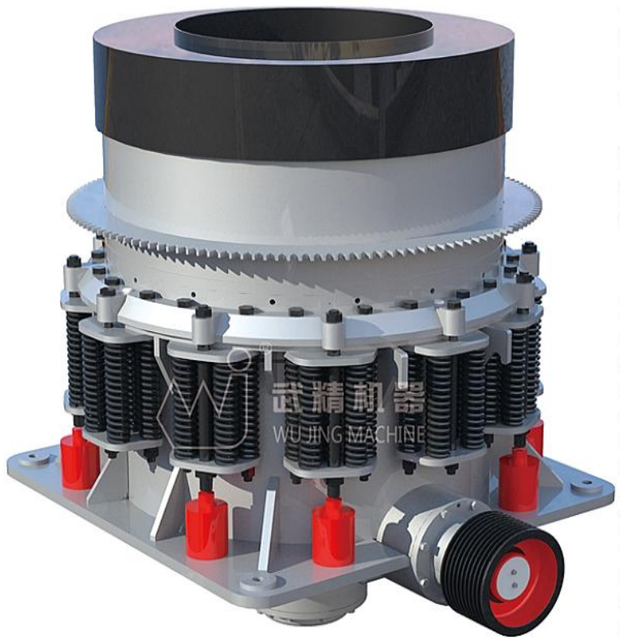

PYS/F系列复合圆锥破碎机是我公司在吸收国内外先进技术基础上，研制的新一代机型，该机型破碎的物料针片状比例、粒度均匀性及零部件寿命等均优于传统的弹簧圆锥破碎机。同时，该机型采用了液压锁紧、液压调整排料口和液压清腔等控制装置，使其自动化程度大大提高。

PYS/F系列复合圆锥破碎机可破碎抗压强度不超过250MPa的各种矿石，广泛适用于金属与非金属矿、水泥、砂石、建材、冶金等行业，适用于铁矿石、有色金属矿石、花岗岩、石灰石、石英岩、沙岩、鹅卵石等矿石的中、细碎破碎作业。

PYS/F series compound crusher is a new model developed by our company through the absorption of domestic and overseas advanced technologies. The needle and plate proportion、particle uniformity and parts' use life are all superior to those traditional spring cone crushers. Meanwhile, the control devices, including hydraulic locking devices, hydraulically adjusted discharge port, and hydraulic chamber cleaning devices, are adopted for this model to remarkably improve the automation level.

Capable of crushing all kinds of ores with compressive strength no more than 250MPa, the PYS series compound cone crusher is suitable for intermediate crushing and fine crushing of those ores including iron ore, non-ferrous metal ore, granite, limestone, quartzite, sandstone, and cobblestone. It is extensively used in metallic and non-metallic mining, cement, gravel, construction material, and metallurgy industries.

性能特点：
PERFORMANCE FEATURES:

1.结构简单、运行平稳、性能稳定；

2.机架采用CO_2气体保护焊接、并经退火处理，坚固耐用；

3.各易磨损部位均采用锰钢件保护，延长整机寿命；

4.液压清腔油缸能快速清除破碎腔内积料和不易破碎物，使维护时间大大缩短；

5.液压调整排料口，方便快捷，调整准确；

6.润滑系统设有压力和温度保护装置，并与主电机连锁，保护主机不被损坏。

1.Simple structure, stable operations, and stable performances.

2.The frame is welded by CO_2 gas shielded welding process and is annealed to realize high firmness and durability.

3.All easily wear portions are protected by manganese steel parts to prolong the service life of the whole machine.

4.The hydraulic chamber cleaning cylinder can rapidly remove the deposited material and unbreakable objects from the crushing chamber to remarkably shorten the maintenance time.

5.The hydraulically adjusted discharge port features high convenience and rapidness and accurate adjustment.

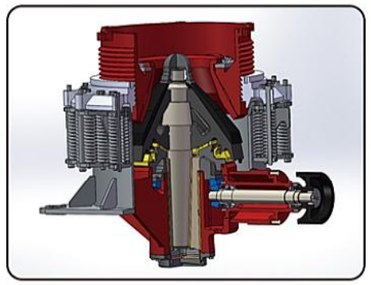

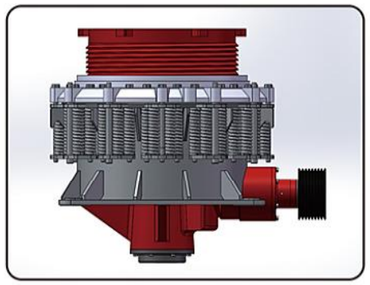

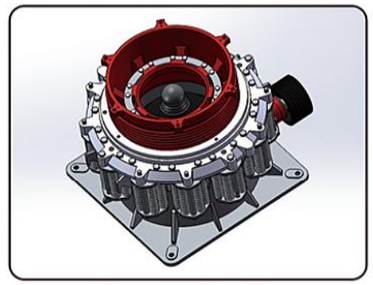

技术参数表
TECHNICAL SPECIFICATION

规格型号 Specification and model	最大进料口尺寸 Maximum feed size (mm)	排料口调整范围 Adjustment range of discharge port (mm)	处理能力 Productivity (t/h)	电动机功率 Motor power (kW)	重量（不含电动机） Weight (exclusive of motor) (t)
PYS1420	200	25～50	160～320	220	26
PYS1520	200	25～50	200~400	250	37
PYS1535	350	50～80	400~600	250	37
PYS1720	200	25～50	240~500	315	48
PYS1735	350	50～80	500~800	315	48
PYF2120	200	25～50	400～800	480	105
PYF2140	400	50～100	800～1600	400	105

注：表中的处理能力数据仅基于破碎物料松散密度为1.6t/m³时开路作业生产。实际生产能力与原料的物理性质、给料方式、给料尺寸等相关因素有关。有关更多详情，请致电武精矿机。

Note: the processing capacity data in the table is only based on the loose density of crushed materials, which is 1.6t/m³ Open circuit operation during production. The actual production capacity is related to the physical properties of raw materials, feeding mode, feeding size and other related factors. For more details, please call WuJing machine.



PF

PF 系列反击式破碎机
PF SERIES IMPACT CRUSHER

武精机器 WU JING MACHINE

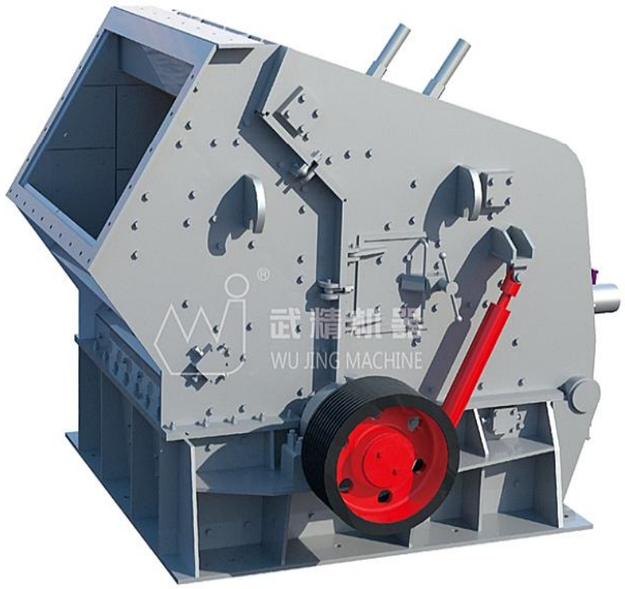

PF系列反击式破碎机是我公司在吸收国内外先进技术基础上，结合国内砂石行业具体工况条件而研制的新一代反击式破碎机。本产品可处理各种粗、中、细物料（花岗石、玄武岩、混凝土、石灰石等），具有破碎比大、破碎效率高、维修方便等特点，破碎出的成品颗粒呈立方体，是高等级公路路面及水电建设所用骨料的理想加工设备。

反击式破碎机广泛应用于各种矿石破碎、铁路、高速公路、水利工程、水泥、建筑、化工等行业，其排料粒度大小可以调节，破碎规格多样化。

PF series impact crusher is a new generation of impact crusher that developed by our company. This crusher can deal with most kinds of coarse, medium and fine material crushing works (granite, basalt, concrete, limestone, etc.), with features of large crushing ratio, high crushing efficiency, convenient maintenance and good shape of final products. This crusher is an ideal choice of processing high-grade highway pavement and hydropower construction materials. Impact crusher is widely used in all kinds of ore crushing, railway, highway, water conservancy engineering, cement, construction, chemical and other industries.

性能特点：
PERFORMANCE FEATURES:

1. 进料口大、破碎腔高，适用于破碎中等硬度的物料。
2. 反击板与板锤间隙方便调节（客户可以自主选用人工或液压调节），有效控制出料粒度，颗粒形状好。
3. 高铬板锤，独特的反击衬板，抗冲击、耐磨损、寿命长。
4. 转子运转稳定，与主轴无键连接，检修方便、安全可靠。
5. 维修方便、操作简单。

1. Large feed opening, high crushing chamber, suitable for crushing medium hardness materials.
2. The gap between impact plate and hammer is convenient to adjust (customers can choose manual or hydraulic adjustment), material size can be controlled effectively, and the shape finished products is perfect.
3. With high chromium hammer, special impact liner, that help to improve impact resistance, wear resistance, and service life.
4. The rotor runs stably and is keyless connected with the main shaft, making maintenance convenient, safe and reliable.
5. Convenient maintenance and simple operation.

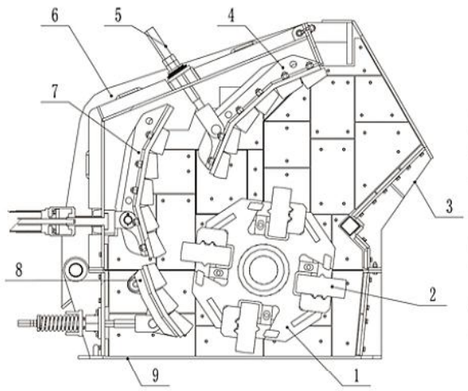

1. 转子部件
2. 板锤
3. 前箱体
4. 第一反击架
5. 调整系统
6. 后箱体
7. 第二反击架
8. 均整架
9. 底座

技术参数表
TECHNICAL SPECIFICATION

规格型号 Specification and model	转子规格 Rotor specification (mm)	最大进料粒度 Maximum feed size (mm)	排料口调整范围 Adjustment range of discharge port (mm)	处理能力 Productivity (t/h)	电动机功率 Motor power (kW)	重量（不含电动机） Weight (exclusive of motor) (t)
PF1214	Φ1250X1400	300	15~60	80~120	160	16.8
PF1214~Ⅱ	Φ1250X1400	300	15~50	80~120	160	18.6
PF1315	Φ1320X1650	350	15~60	120~250	220	22.1
PF1515	Φ1500X1650	350	15~60	150~350	280	28
PF1520	Φ1500X2000	400	15~60	200~500	200X2	35

注：表中的处理能力数据仅基于破碎物料松散密度为 1.6t/m³ 时开路作业生产。实际生产能力与原料的物理性质、给料方式、给料尺寸等相关因素有关。有关更多详情 请致电武精矿机。

Note: the processing capacity data in the table is only based on the loose density of crushed materials, which is 1.6t/m³ Open circuit operation during production. The actual production capacity is related to the physical properties of raw materials, feeding mode, feeding size and other related factors. For more details, please call WuJing machine.



ZSW

ZSW 系列振动给料机
VIBRATING FEEDER

武精机器 WU JING MACHINE

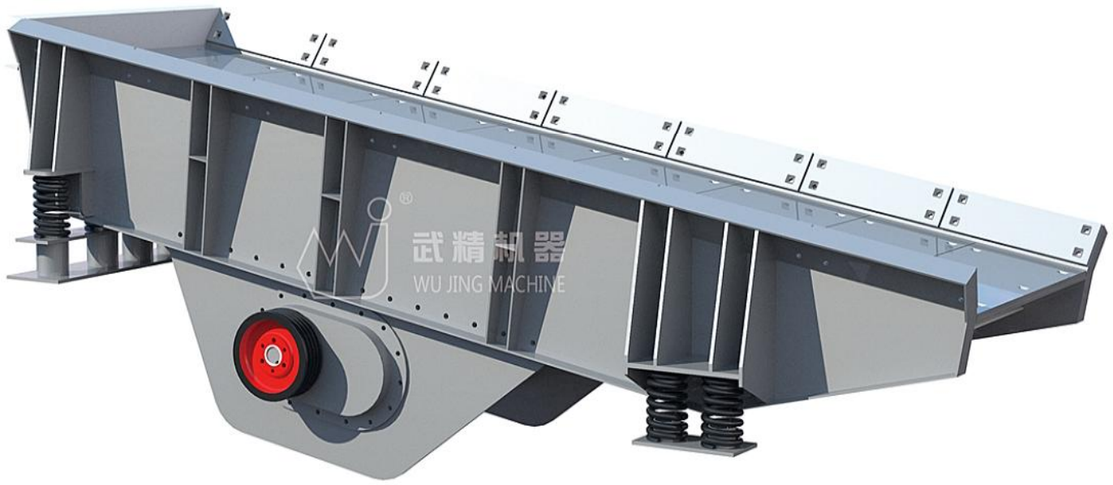

本产品是大型破碎机的配套设备,具有结构简单、维修方便、牢固耐用、承重力大、效率高、能耗少、给料均匀等特点,广泛应用于建筑、交通、能源、水泥、矿山、化工等行业。

本机分为激振器振动和激振电机振动两种结构形式(激振器振动又分为双偏心轴振动和偏心块振动两种结构形式)。

This product is one assorted device for large-sized crushers. With the advantages of simple structure, convenient maintenances, high stiffness and durability, high carrying capacity, high efficiency, low energy consumption, and uniform feed, it's extensively applied in the construction, transportation, energy, cement, mining, and chemical industries.

This machine is divided into two structural types, namely exciter vibrating type and exciting motor vibrating type (of which the exciter vibrating type is divided into two structural types, namely double eccentric shaft vibrating type and eccentric block vibrating type).

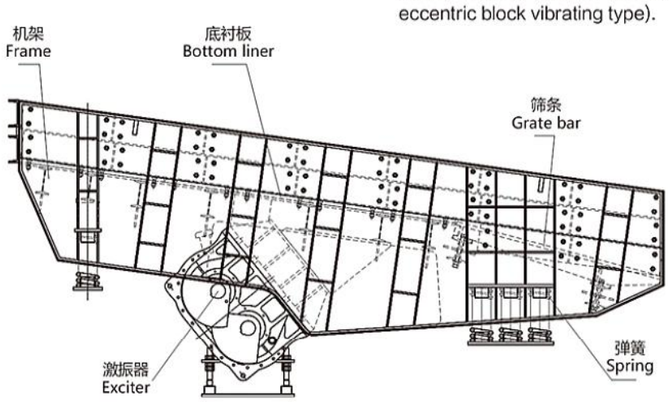

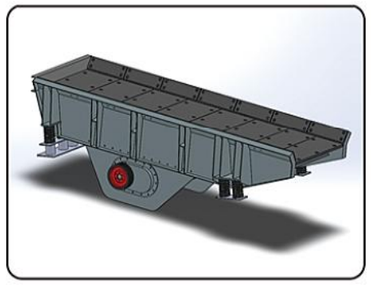

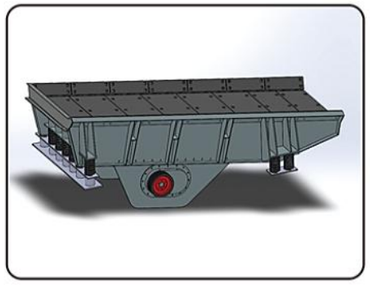

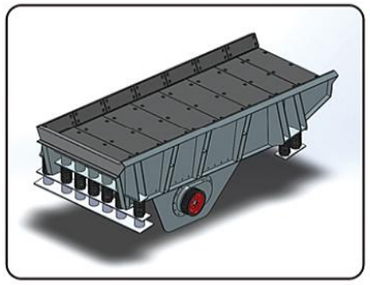

技术参数表
TECHNICAL SPECIFICATION

规格型号 Specification and model	最大进料粒度 Maximum feed size (mm)	转速 Speed (r/min)	处理能力 Productivity (t/h)	电动机功率 Motor power (kW)	外形尺寸 (长×宽×高) Overall dimensions (L×W×H) (mm)
ZSW3895	500	500~750	100~160	11	3800X2150X1990
ZSW4211	600	500~800	150~250	15	4270X2350X2210
ZSW5013B	1000	700~980	400~600	30	5020X2660X2110
ZSW5014B	1100	700~980	500~800	30	5000X2780X2300
ZSW5017B	1100	700~980	540~1000	45	5100X3100X2100

注：表中的处理能力数据仅基于破碎物料松散密度为 1.6t/m³ 时开路作业生产。实际生产能力与原料的物理性质、给料方式、给料尺寸等相关因素有关。有关更多详情 ,请致电武精矿机。

Note: the processing capacity data in the table is only based on the loose density of crushed materials, which is 1.6t/m³ Open circuit operation during production. The actual production capacity is related to the physical properties of raw materials, feeding mode, feeding size and other related factors. For more details, please call WuJing machine.

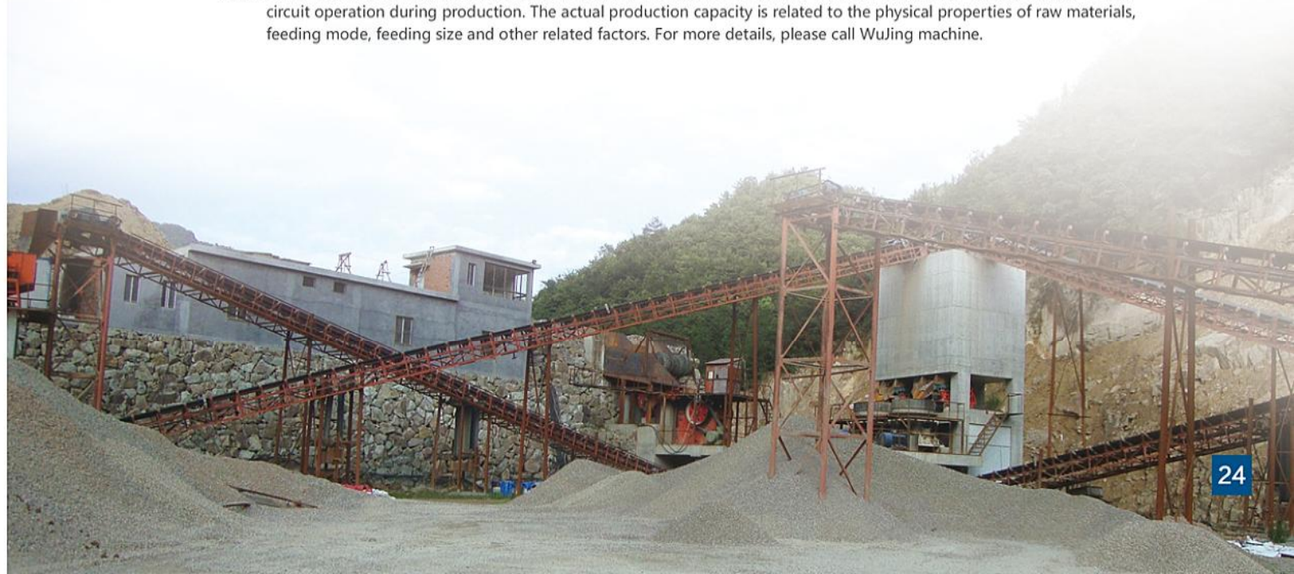

YA

YA 系列圆振动筛
YA SERIES VIBRATING SCREEN

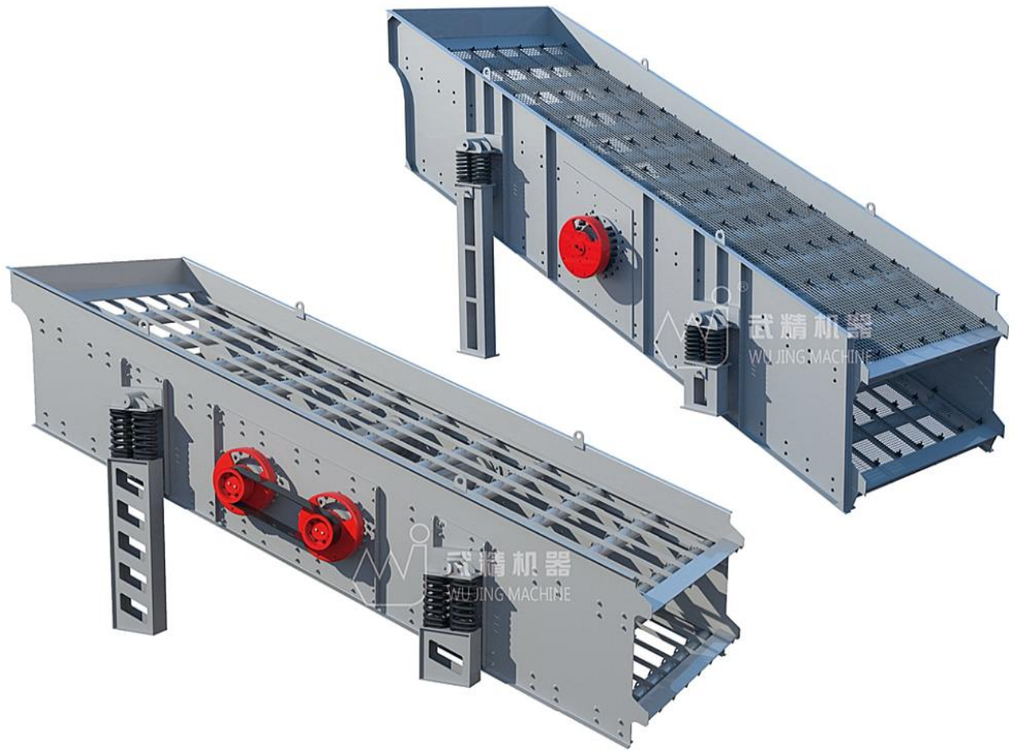

YA系列圆振动筛规格齐全、设计合理、结构简单、激振力强、处理量大、筛分效率高。全新的设计、精良的制造,使本系列产品坚固耐用、维修方便。本产品已广泛应用于建筑、交通、能源、水泥、矿山、化工等行业的筛分作业。

YA Series of vibrating screen offers comprehensive specifications. It is well-designed with simple structure, strong excitation force, large processing capacity, and high screening efficiency. It also combined with excellent manufacturing technic, that make this series of products durable and very easy in maintenance. This product has been widely used in construction, transportation, energy, cement, mining, chemical and other industries.

性能特点：
PERFORMANCE FEATURES:

1. 振动幅度可调性好
2. 筛分均匀
3. 处理能力大
4. 结构合理，坚固耐用

1. Adjustable vibration range.
2. Screening evenly.
3. Large processing capacity.
4. ideal structure, strong and durable.

技术参数表
TECHNICAL SPECIFICATION

规格型号 Specification and model	筛面规格 Screen specification	筛网层数 Number of screen layers	倾角 Inclination angle (°)	最大进料粒度 Maximum feed size (mm)	生产能力 Productivity (t/h)	电动机功率 Motor power (kW)	重量（不含电动机） Weight (exclusive of motor) (kW)	外形尺寸（长×宽×高） Overall dimensions (L×W×H) (mm)
2YA1845	1800×4500	2	20	200	60－220	15	5	4500×3030×3100
2YAH1845	1800×4500	2	20	350	60－300	18.5	6.5	4850×2990×3410
3YA1845	1800×4500	3	20	200	60－300	18.5	6	5010×2980×3710
2YA1860	1800×6000	2	20	200	60－250	18.5	7	5900×3030×3710
3YA1860	1800×6000	3	20	200	60－320	18.5	9	6470×3030×4300
2YAH2148	2100×4800	2	20－22	350	120－400	30	10.5	6310×3860×3550
2YA2160	2100×6000	2	20	200	60－300	30	8	6310×3860×3620
3YA2160	2100×6000	3	20	200	80－320	30	10	6500×3860×4430
2YA2460	2400×6000	2	20	200	80－300	30	9.1	6310×4020×3760
2YAH2460	2400×6000	2	20	400	120－450	30	11	6300×4190×4010
3YA2460	2400×6000	3	20	200	80－350	30	11.2	6520×4050×4380
3YAH2460	2400×6000	3	20	250	120－500	37	12.1	6660×4260×4430
2YA3060	3000×6000	2	20	200	100－500	30	12.3	6390×4740×4120
2YAH3060	3000×6000	2	20	200	100－550	37	14	6400×4780×4120
3YA3060	3000×6000	3	20	200	100－550	37	15.2	6380×4740×4680
2YAH3080	3000×8000	2	20	200	100－700	30×2	20.5	8180×4850×4780
3YA3080	3000×8000	3	20	200	100－750	30×2	23	8330×4850×5420

注：表中的处理能力数据仅基于破碎物料松散密度为 1.6t/m³ 时开路作业生产。实际生产能力与原料的物理性质、给料方式、给料尺寸等相 关因素有关。有关更多详情，请致电武精矿机。

Note: the processing capacity data in the table is only based on the loose density of crushed materials, which is 1.6t/m³ Open circuit operation during production. The actual production capacity is related to the physical properties of raw materials, feeding mode, feeding size and other related factors. For more details, please call WuJing machine.



VSI

VSI 系列立式冲击式破碎机
VERTICAL SHAFT IMPACT CRUSHER

武精机器 WU JING MACHINE

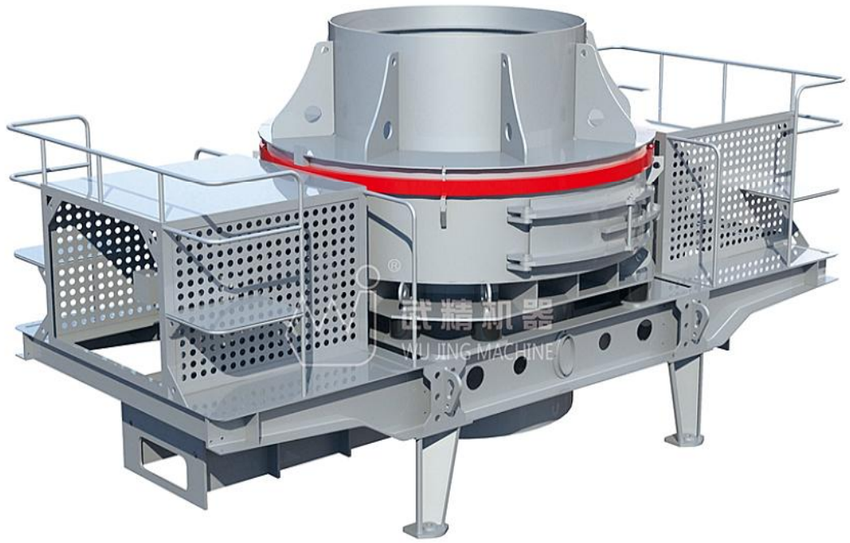

VSI立式冲击式破碎机广泛应用于各种矿石、河卵石、金刚砂、耐火材料、冶金矿渣等脆硬性物料的细碎、粗磨以及建筑骨料的整形等作业，特别是对中硬、特硬物料的破碎比其他类型破碎机单位能耗更低、效率更高，是目前机制砂和骨料整形的首选设备。

本机有“石打石”和“石打钢”两种破碎腔，“石打石”多用于硬性物料的破碎整形，“石打钢”多用于中、硬性物料的破碎加工，两种腔型结构可以实现互相转换，以适应不同物料的破碎加工需求。

Vertical impact crusher is widely used in fine and coarse crushing of brittle and hard materials as ores, pebble, silicon carbide, refractory, and metallurgical slag. It is more efficiency and cost effective than other kinds of crusher in processing hard or medium hard materials and the necessary equipment for producing the artificial sand.

This machine adopts the principle and technology of the “stone hitting stone” and “stone hitting steel” crushing, which makes the finished product in excellent particle shape, reasonable gradation and also improved production efficiency.

性能特点：
PERFORMANCE FEATURES:

1. 优异的整形性能，粒形好、针片状比例少。
2. 独特的转子和腔型设计，制砂成品率高。
3. 耐磨件寿命长，更换方便。
4. 结构简单，安装、操作方便，维修费用低廉，运行成本低。
5. 低噪音，低振动，粉尘少，符合环保要求。

1. Excellent reshaping performance, good particle shape, and low flaky content.
2. The unique rotor and chamber shape design realizes high rate of finished sand products.
3. The wearing parts are long in life, convenient in replacement.
4. Simple structure, convenient installation and operations, low maintenance cost, and low operation cost.
5. Low noise, low vibration, few dust, and compliance with environmental protection requirements.

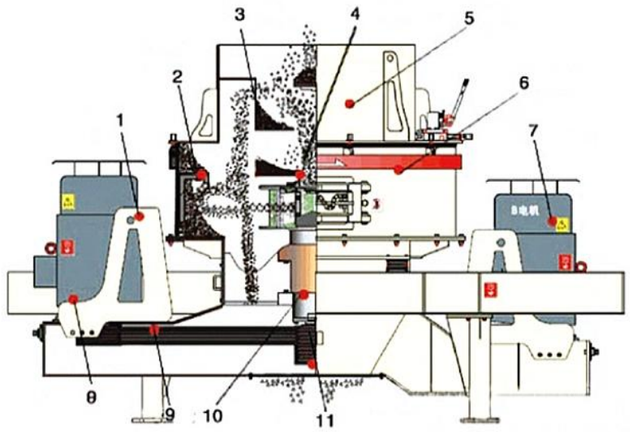

1 护栏
2 中腔衬板
3 粉碎腔
4 叶轮
5 进料口
6 机壳
7 电机
8 主电机
9 皮带轮
10 轴筒
11 排料口

技术参数表
TECHNICAL SPECIFICATION

规格型号 Specification and model	最大进料粒度 Maximum feed size (mm)	处理能力 Processing capacity (t/h)	电动机功率 Motor power (kW)	外形尺寸 (长×宽×高) Overall dimensions (L×W×H) (mm)
VSI8832	40	200～300	160X2	5500X2460X3010
VSI9540	40	250～360	200X2	5700X2760X3010
VSI1150	40	300～450	250X2	5700X2760X3010
VSI1263	40	300～550	315X2	5700X2890X3440

注：表中的处理能力数据仅基于破碎物料松散密度为 1.6t/m³ 时开路作业生产。实际生产能力与原料的物理性质、给料方式、给料尺寸等相关因素有关。有关更多详情，请致电武精矿机。

Note: the processing capacity data in the table is only based on the loose density of crushed materials, which is 1.6t/m³ Open circuit operation during production. The actual production capacity is related to the physical properties of raw materials, feeding mode, feeding size and other related factors. For more details, please call WuJing machine.



LSX

LSX 系列螺旋洗砂机
LSX SERIES SAND WASHER

武精机器 WU JING MACHINE

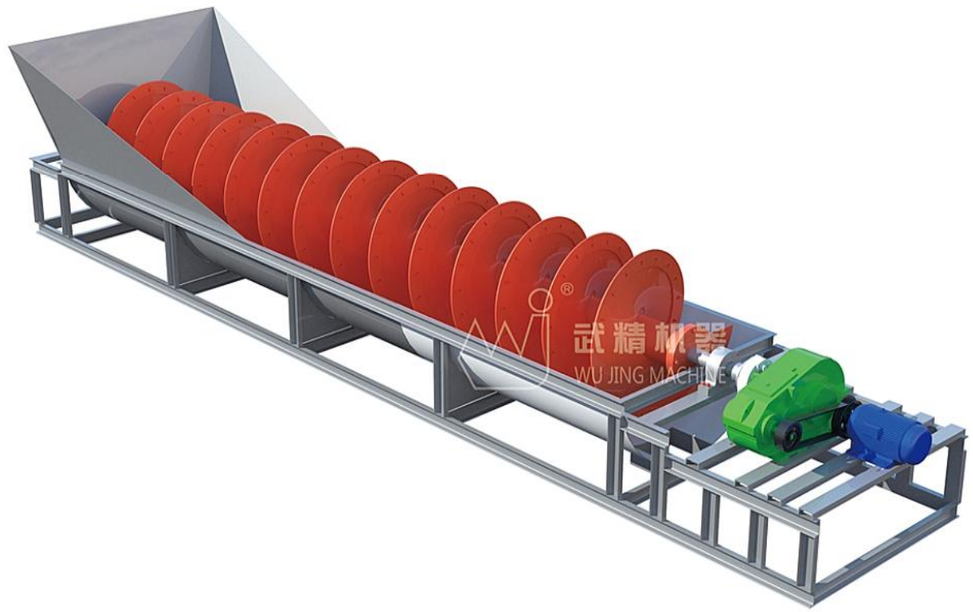

螺旋洗砂机适用于冶金、建材、水电等行业的洗选、分级、除杂等作业，用于细粒度和粗粒度物料的洗选作业。对建筑用砂、筑路用砂石犹为适宜。螺旋砂石洗选机功率消耗小、洗净 度高。密封结构好、全封闭传动装置、可调式堰板，确保了产品高效、耐用、清洗、脱水效果好、细粒产品保持稳定等特点。

LSX Series sand washing machine is suitable for washing, grading, purification, and other operations of fine-grained and coarse-grained materials in metallic, construction, hydropower industries. It is suitable for producing building sand and road sand. This type of sand washing machine have features of lower energy consumption, high efficiency, good seal ability, fully closed transmission device, adjustable weir plate.

性能特点：
PERFORMANCE FEATURES:

1.处理量大、能耗低。
2.所洗物料流失少、选洗效率高。
3.结构简单，运行稳定。
4.维修方便，故障率低。
5.经久耐用。
6.节省水资源。

1.High processing capacity and low power consumption
2.Low loss of washed material and high washing efficiency.
3.Simple structure and stable operations.
4.Convenient maintenances and low malfunction rate.
5.High durability.
6.Saving of water resource.

技术参数表
TECHNICAL SPECIFICATION

规格型号 Specification and model	螺旋叶片直径 Diameter of screwblade (mm)	水槽长度 Length of water trough (mm)	入选粒度 Feed particle size (mm)	处理能力 Productivity (t/h)	电动机功率 Motor (kW)	外形尺寸(长×宽×高) Overall dimensions (L×W×H) (mm)
LSX1270	1200	7000	≤10	50～70	7.5	9225X2200X3100
LSX1580	1500	8000	≤10	60～100	11	9190X2200X3710
LSX1880	1800	8000	≤10	90～150	22	9230X2400X3950
2LSX1580	1500	8000	≤10	120～200	11×2	9190X3200X3710

注：表中的处理能力数据仅基于破碎物料松散密度为 1.6t/m³ 时开路作业生产。实际生产能力与原料的物理性质、给料方式、给料尺寸等相关因素有关。有关更多详情，请致电武精矿机。

Note: the processing capacity data in the table is only based on the loose density of crushed materials, which is 1.6t/m³ Open circuit operation during production. The actual production capacity is related to the physical properties of raw materials, feeding mode, feeding size and other related factors. For more details, please call WuJing machine.



RXD

RXD 系列轮斗式洗砂机

RXD SERIES WHEEL BUCKET SAND WASHING MACHINE

武精机器 WU JING MACHINE

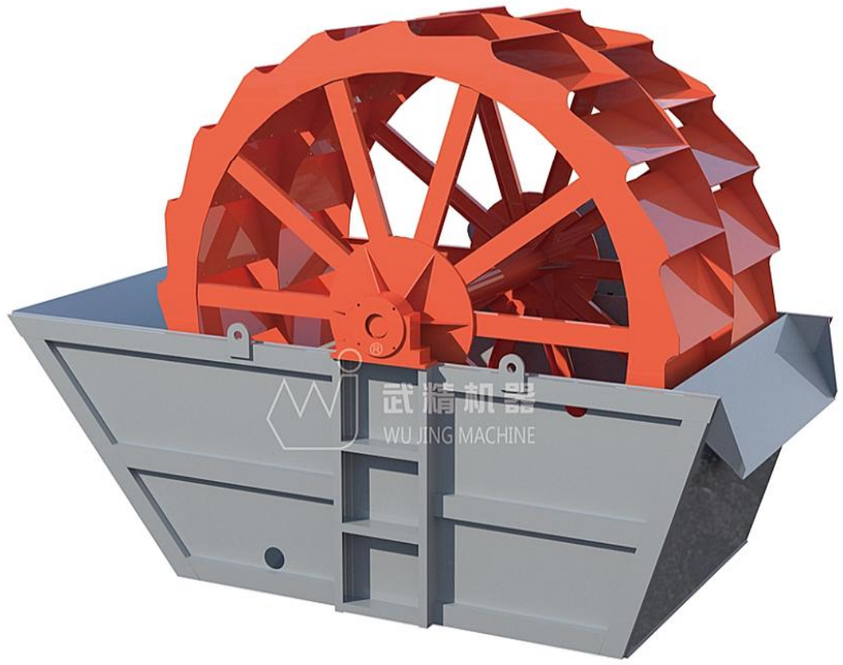

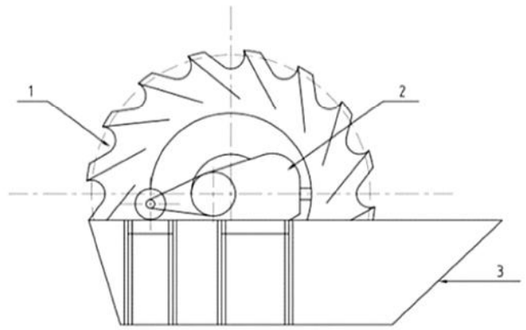

1 叶轮
2 减速装置
3 洗砂槽

轮斗式洗砂机是处理砂石和矿渣颗粒的洗选设备。该洗砂机广泛运用于砂石场、矿山建材、交通、化工、水利水电、混凝土搅拌站等行业中对物料的洗选。

Wheel bucket sand washing machine is widely used in the washing of materials in sand and gravel aggregate, building materials, transportation, chemical industry, water conservancy and hydropower, concrete mixing station industries.

性能特点：
PERFORMANCE FEATURES:

1.结构简单，运行稳定。
2.轴承和水、物料分开，避免机器过早因污染生锈而引发的损坏现象。
3.适用于各种各样的工作环境。
4.所洗物料流失少、选洗效率高，可完全满足高等级用料的要求。
5.使用寿命比较长，几乎没有易损件。

1. Simple structure and stable operation.
2. Separate bearings from water and materials to avoid damage caused by premature rust.
3. Suitable for a variety of work environment.
4. Low material losing and high cleaning efficiency, which can fully meet the requirements of high-grade materials.
5. Long service life, almost no wearing parts.

技术参数表
TECHNICAL SPECIFICATION

规格型号 Specification and model	叶轮直径 Impeller diameter (mm)	水槽长度 Length of water trough (mm)	入选粒度 Feed particle size (mm)	处理能力 Productivity (t/h)	电动机功率 Motor (kW)	外形尺寸(长×宽×高) Overall dimensions (L×W×H) (mm)
RXD3016	3000	3750	≤10	80~100	11	3750X3190X3115
RXD4020	4000	4730	≤10	100~150	22	4840X3650X4100
RXD4025	4000	4730	≤10	130~200	30	4840X4170X4100

注：表中的处理能力数据仅基于破碎物料松散密度为 1.6t/m³ 时开路作业生产。实际生产能力与原料的物理性质、给料方式、给料尺寸等相关因素有关。有关更多详情，请致电武精矿机。

Note: the processing capacity data in the table is only based on the loose density of crushed materials, which is 1.6t/m³ Open circuit operation during production. The actual production capacity is related to the physical properties of raw materials, feeding mode, feeding size and other related factors. For more details, please call WuJing machine.

TS

TS 系列脱水筛
SERIES DEWATERING SCREEN

武精机器
WU JING MACHINE

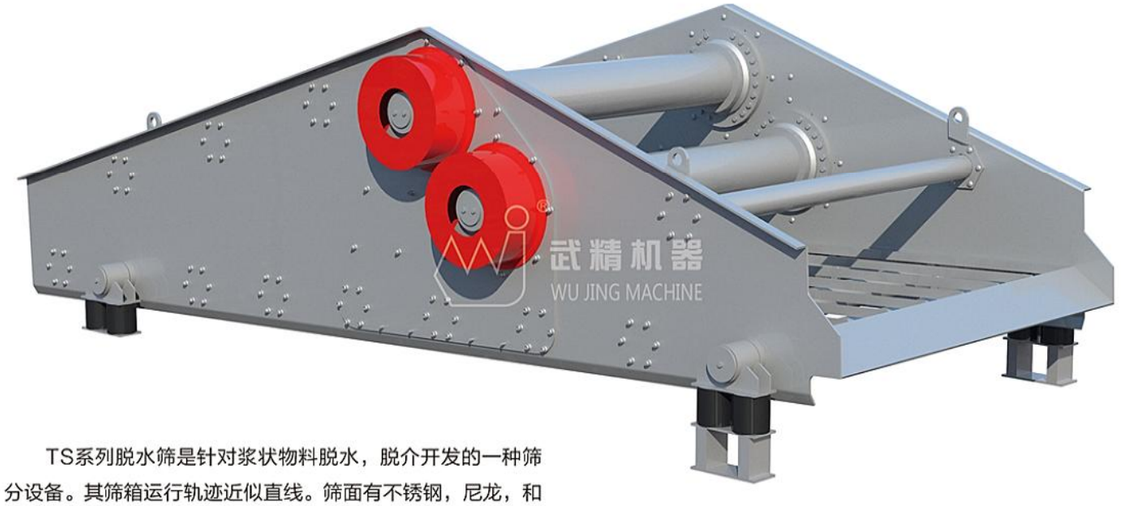

TS系列脱水筛是针对浆状物料脱水，脱介开发的一种筛分设备。其筛箱运行轨迹近似直线。筛面有不锈钢，尼龙，和聚氨酯等多种材质，可根据用户实际情况进行选择。

TS series dewatering screen is a screening equipment developed for dehydration of slurry materials. The screen box running straightly. Screen surface can be stainless steel, nylon, polyurethane and other materials, according to the actual situation of the user to choose.

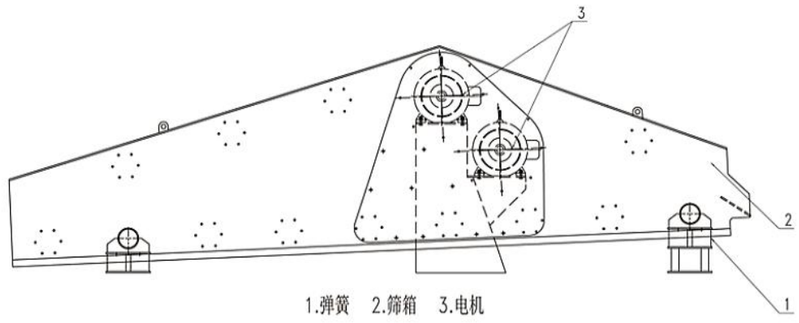

1.弹簧　2.筛箱　3.电机

性能特点：
PERFORMANCE FEATURES:

1.结构紧凑，整机刚度与各部强度大。
2.相对耗能少，脱水率高。
3.相对体积小，单位面积处理能力大，便于系统工艺布置。
4.安装与调试方便，运行可靠，操作维修简便。
5.筛面结构与类型模块化设计，更换方便。

1. Ideal structure and durable.
2. Low energy consumption and high dehydration rate.
3. Small size, large processing capacity, convenient layout.
4. Convenient installation and debugging, reliable operation, easy operation and maintenance.
5. Modular design of screen surface structure, easy to replace.

技术参数表
TECHNICAL SPECIFICATION

规格型号 Specification and model	面积 Area (m^2)	处理能力 Capacity (t/h)	电动机功率 Motor power (kW)	外形尺寸(长×宽×高) Overall dimensions (L×W×H) (mm)
TS16-40	6.4	60-100	11X2	4280X2230X1720
TS20-45	9.0	70-150	15X2	4855X2710X1795
TS24-45	10.8	90-200	18.5X2	4855X3110X1795
TS24-60	14.4	90-200	30X2	6345X3060X1940
TS30-60	18	150-300	30X2	6350X3660X1810

注：表中的处理能力数据仅基于破碎物料松散密度为 1.6t/m^3 时开路作业生产。实际生产能力与原料的物理性质、给料方式、给料尺寸等相关因素有关。有关更多详情，请致电武精矿机。

Note: the processing capacity data in the table is only based on the loose density of crushed materials, which is 1.6t/m^3 Open circuit operation during production. The actual production capacity is related to the physical properties of raw materials, feeding mode, feeding size and other related factors. For more details, please call WuJing machine.

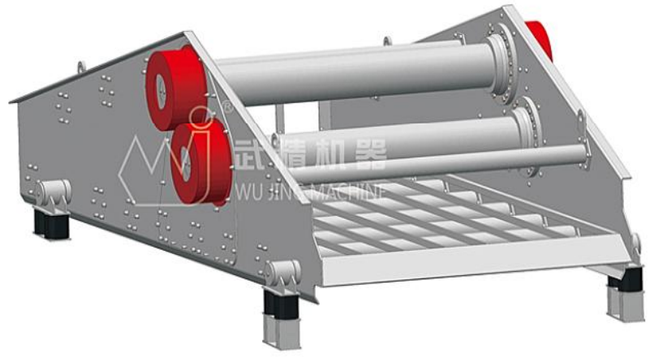

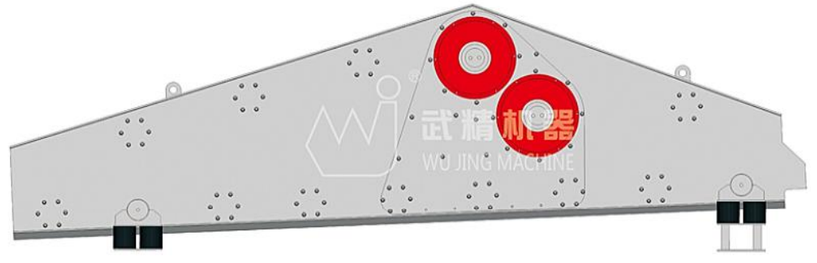



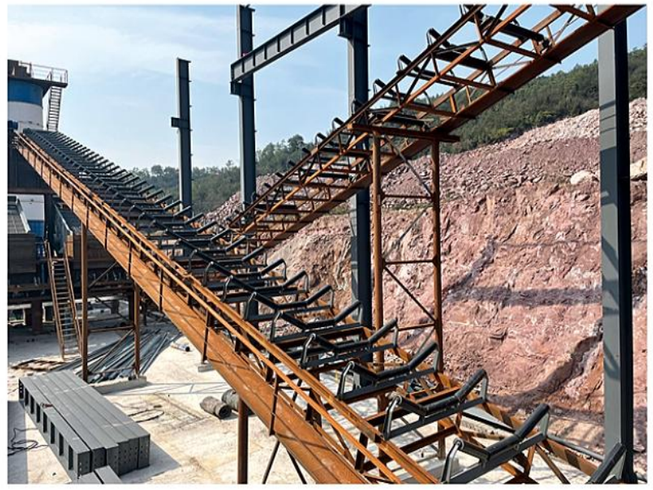

皮带输送机具有输送量大、结构简单、维修方便、部件标准化等优点。它广泛应用在矿山、冶金、煤炭等部门，用来输送松散物料或成件物品。

根据输送工艺要求，可以单台输送，也可多台组合或其他输送设备组成水平或倾斜的输送系统，以满足不同布置形式的作业线需要。

Belt conveyor has the advantages of large throughput, simple structure, convenient maintenance and standardization of components. It is widely used in transfer loose materials in mining, metallurgy, coal and other sectors.

According to the requirements of the conveying process, it can be a single or multiple, and horizontal or inclined conveying system, in order to meet various requirements.

性能特点：
PERFORMANCE FEATURES:

1. 输送量大
2. 结构简单
3. 维修方便
4. 部件标准化

1. Large throughput
2. Simple structure
3. Easy maintenance
4. tandardized spare parts

技术参数表
TECHNICAL SPECIFICATION

规格型号 Specification and model	皮带长度 Length（m）/ 功率 Power（kw）			输送速度 Speed (m/s)	输送能力 Capacity (t/h)
B650	≤12/4	12-20/7.5	20-30/7.5-11	1.25-2.0	80-190
B800	≤10/4	12-20/11	20-30/11-18.5	1.25-2.0	130-320
B1000	≤10/11	12-20/18.5	20-40/18.5-30	1.25-2.0	280-550
B1200	≤10/15	12-20/22	20-40/22-45	1.25-2.0	440-850
B1400	≤15/22	12-20/30	20-40/30-55	1.25-2.0	660-1200
B1600	≤15/30	12-20/37	20-40/37-75	1.25-2.0	800-1500

注：表中的处理能力数据仅基于破碎物料松散密度为 1.6t/m³ 时开路作业生产。实际生产能力与原料的物理性质、给料方式、给料尺寸等相关因素有关。有关更多详情，请致电武精矿机。

Note: the processing capacity data in the table is only based on the loose density of crushed materials, which is 1.6t/m³ Open circuit operation during production. The actual production capacity is related to the physical properties of raw materials, feeding mode, feeding size and other related factors. For more details, please call WuJing machine.



浙江金华时产400吨破碎生产线











河南驻马店时产2400吨破碎生产线



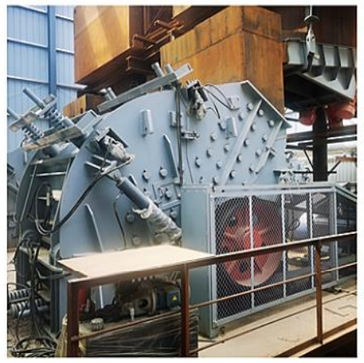





圆锥式破碎机耐磨件
PARTS FOR CONE CRUSHER



定锥 Bowl liner



动锥 Mantle



定锥 Bowl liner

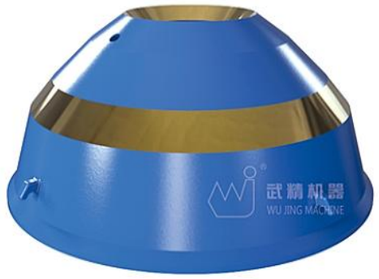

动锥 Mantle

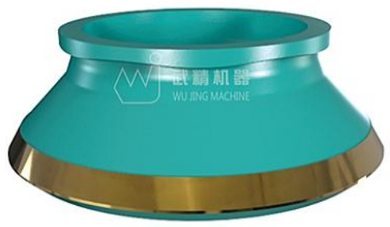

定锥 Bowl liner

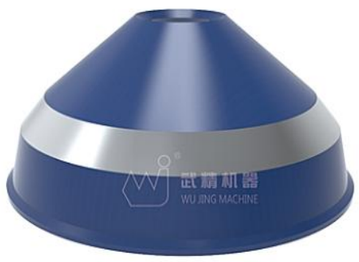

动锥 Mantle

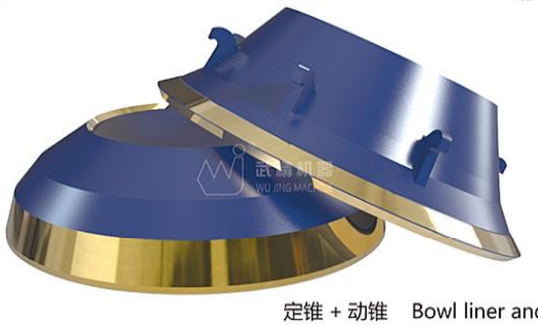

定锥 + 动锥　Bowl liner and Mantle

颚式破碎机耐磨件
PARTS FOR JAW CRUSHER



边护板 Check plate



齿板 Jaw Plate



齿板 Jaw Plate



齿板 Jaw Plate



齿板 Jaw Plate



齿板 Jaw Plate

旋回式破碎机耐磨件
PARTS FOR GYRATORY CRUSHER



衬板 Liner



动锥 Mantle



动锥 + 衬板 Mantle and Liner



护甲 Spider Liner



护甲 Spider Liner



护甲 Spider Liner

破碎机铜类配件
CRUSHER BRONZE PARTS



传动轴铜套
Contershaft Bushing



铜 套
Eccentric Bushing



球面瓦 Socket Liner



动锥上铜套
Head Bushing Upper



动锥下铜套
Head Bushing Lower



止推轴承 Step Bearing

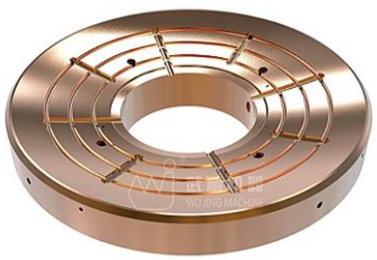

止推轴承 Step Bearing



调整环
Adjustment Ring



调整环总成
Adjustment Ring Assembly



偏心配重
Counterweight



调整套总成
Bowl Assembly

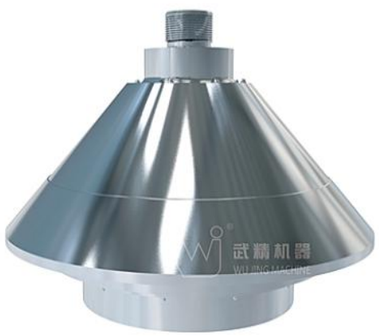

动锥体 Head

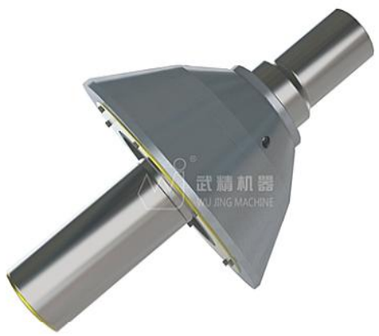

动锥总成 Head Assembly

圆锥式破碎机配件
SPARE PARTS FOR CONE CRUSHER

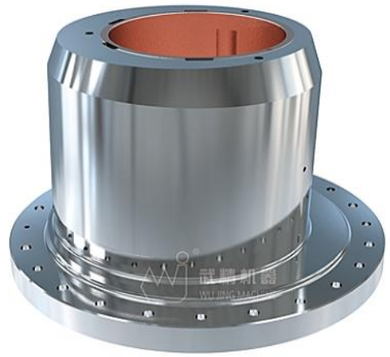

偏心套
Eccentric Assembly



主轴 Shaft



传动轴架
Pinionshaft Housing



主机架总成
Main Frame Assebly



上机架 Top Shell

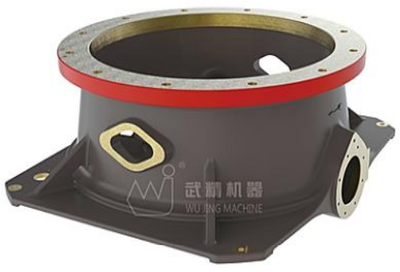

下机架 Bottom Shell

破碎机配件
SPARE PARTS FOR CRUSHER

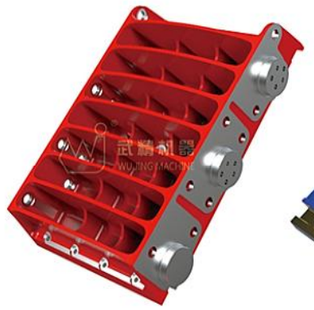

前墙 Front Wall



前墙 Front Wall

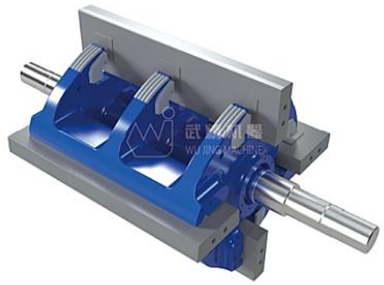

转子总成 Rotor Assembly



反击架 Breaker Plate

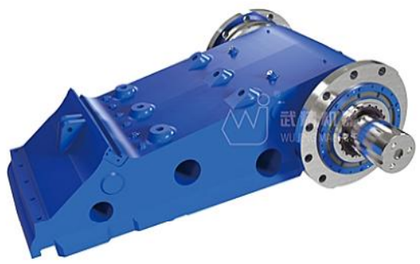

动颚总成 Pitman Assembly



飞轮 Fly Wheel



旋回破横梁 Spider

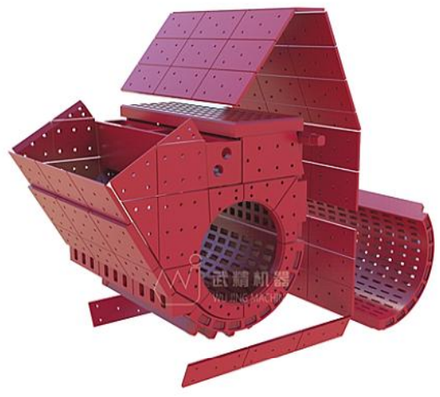

金属破衬板 Liner

工程机械配件
PARTS FOR ENGINEERING MACHINERY



主动轮 Driving Tumbler



从动轮 Front Idler



履带板 Track Pad



履带板 + 从动轮
Track Pad and Front idler



履带板总成 Track Pad Assembly



履带板总成 Track Pad Assembly